1977.5-1979 F250 4wd (and 79 F350 4wd) to 2005+ Super Duty front end kit instructions.

Please note that engine removal is likely necessary and that makes this kit more time consuming that most of the other conversions I offer. Otherwise this is not particularly difficult. There is no cutting or welding required. You will need to do a decent amount of drilling but drilling templates are included to help with this

Parts you will need to purchase separately:

-Front axle- 2005+
-Front coil springs- used oem 2005+ SD springs work great
-Front coil spring isolators- From a 2005+ SD. These go between spring and bucket.
See part number 5C3Z-5415-AA
-Front radius arms from any 2005+ SD
-Front Shocks- original to super duty. Bilstein 24-186674 work great
-Steering gear- must be 2005 to 2007 (and early 2008) with 36 spline input.
Buy Lares 11610 from Rockauto if its in the budget
-Pitman arm- has to be a drop arm. Skyjacker FA450 or similar
-Front track bar- 2005+ SD (buy new if it's in the budget)
-Length of 1.5" OD 1.0" ID DOM tube such as TU1031 from Summit Racing

I recommend buying new tie rod ends and ball joints.

Front rubber brake lines for a 2005-2007 super duty

You likely can reuse your original steering shaft, but if that doesn't work, Borgeson 000970

Bump Stops- Energy Suspension 9.9137G or similar

Step One: Remove factory components

Properly support the vehicle and remove these parts:

-Front axles, steering, leaf springs
-Front brake hoses (the rubber portion)
-Front shocks and brackets
- Engine

Clean the front outer frame rails with an angle grinder and wire wheel and spray it with a coat of paint. A thick layer of undercoating may prevent the spring buckets from seating correctly, and a lack of paint may lead to rusting so this is important.

Step Two: Spring Buckets

The spring buckets are designed to mount to the frame using all oem holes- and these are the holes that are shared with the engine perches. Funny enough, it seems that the factory did not drill all of these holes. You'll find that some holes are drilled on the inside of the frame rail but not the outside layer, or vice versa. Use the drilling templates by holding them on the inside of each frame rail, match them to the existing oem holes, use 7/16 bolts to locate them on this inside surface, and drill as necessary. You should only need to drill 2-4 holes per side with a 7/16" drill bit

Install bump stops on the spring buckets on the bottom side. Use Energy Suspension 9.9137G or similar.

Install the driver side bucket with only a couple bolts to hold it for a moment, it needs to be on now, but come off as part of the track bar bracket mounting later. The passenger bucket can be fully installed

The hardware baggie labeled "F14" will have all of the hardware for the buckets

No.1

Spring bucket drilling templates
These are laser engraved to tell you which side is which. After removing engine, hold these on the inside of the frame, most of these holes will match up with oem holes, then drill the remaining holes as needed. Maybe 2-4 holes per side. 7/16" drill bit.

No.2

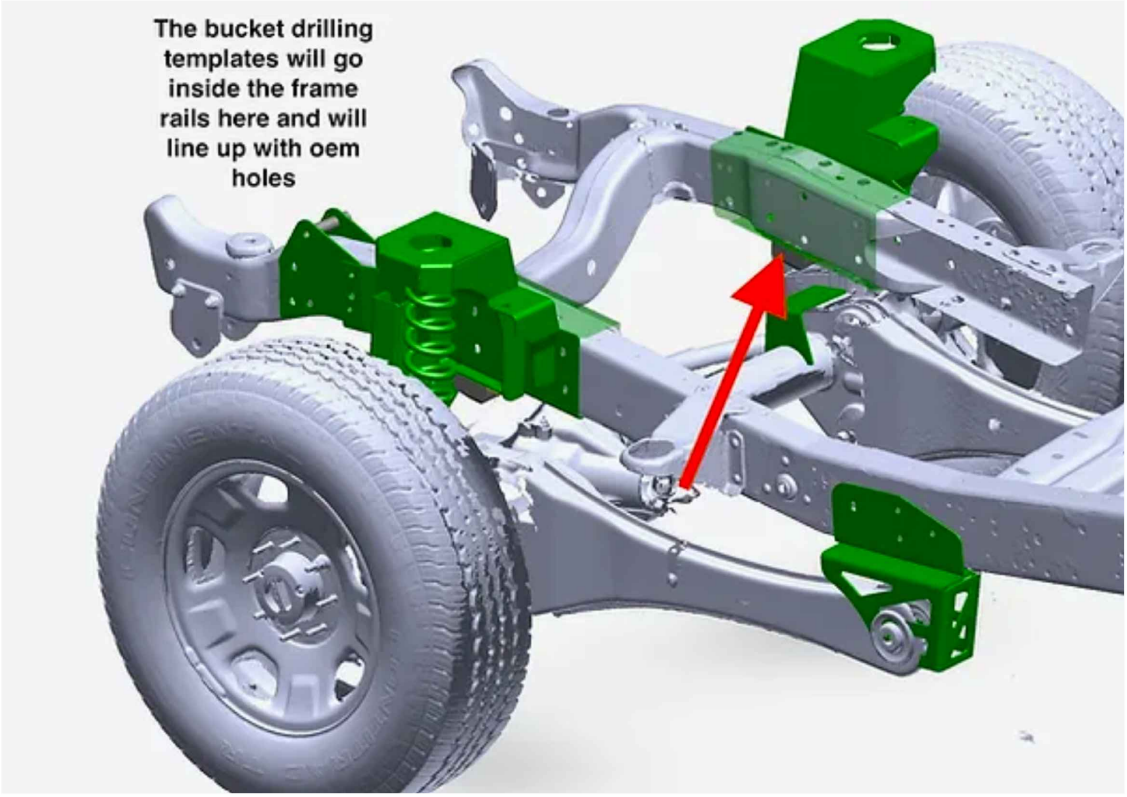

No.3


7/16 x 5.5" bolts in green. Note these get the stover nuts on the back
7/16 x 4.5" bolts in purple. Note these get the stover nuts on the back

No.4

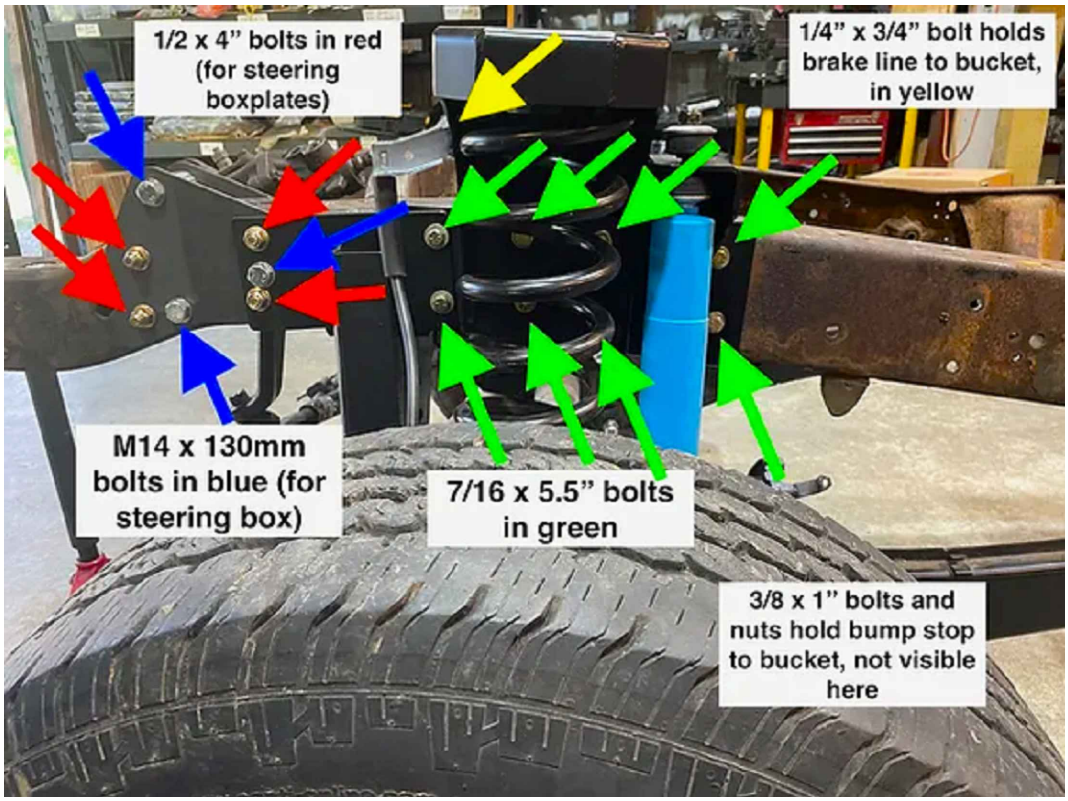
1/2 x 4" bolts in red (for steering boxplates)
1/4" x 3/4" bolt holds brake line to bucket, in yellow
M14 x 130mm bolts in blue (for steering box)
7/16 x 5.5" bolts in green
3/8 x 1" bolts and nuts hold bump stop to bucket, not visible here

Step Three: Steering box

The steering box is located by two flat steel plates which act as permanent fixtures to stabilize the box, and also drilling templates to drill holes for 2 mounting bolts that go through the frame. Install the 2 plates and steel spacers as shown with 1/2" bolts in the oem steering box holes, drill the two new holes with 9/16" bolts.

You will later mount the steering box with 14mm bots, and install a 4" drop pitman arm. hold off on this for now because the track bar bracket needs to go on first. The track bar bracket overlaps the outside steering plate so these plates go in first.

The steering box needs to be a 2005-2007 box. You can probably make another later box work but expect some headache for the newer boxes

The hardware baggie labeled "F12" will have all of the hardware for the steering

No.5

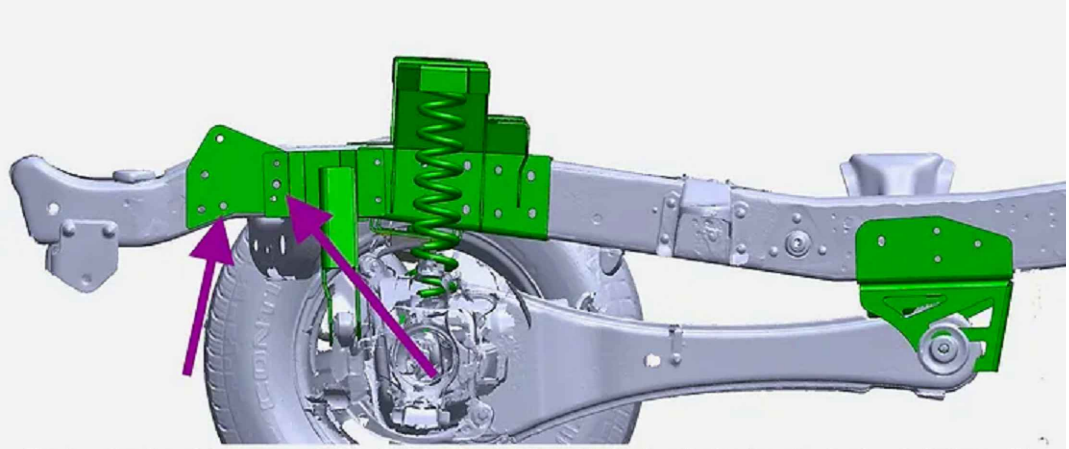

The two steering plates are nearly identical, but have different hole sizes for the top steering box bolt sleeve. The piece with the larger diameter hole goes to the inside of the frame rail
Drill the two holes shown by the arorws with a 9/16" bit for the steering box's 14mm mounting bolts. The other 4 holes through the frame match up with the oem steering box bolt holes. Use the 1/2" x 4" bolts to locate and secure these plates to the frame

No.6

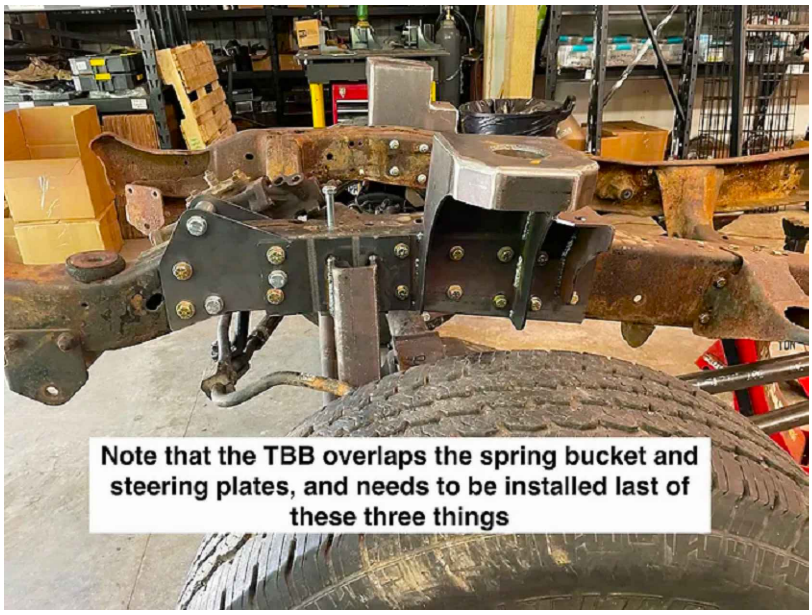

Step Four: Track Bar Bracket

The track bar bracket bolts to the drive side frame rail both with horizontal bolts that are shared with the driver spring bucket, and other bolts shared with the steering plate, then with bolts vertically through the frame rail, and bolts through the engine crossmember. You need to drill the vertical bolts and the engine crossmember bolts

Start by bolting the TBB over top of the spring bucket and steering plates.

Tighten the TBB down fully with these 4 bolts.

This is important. Use the TBB to drill the two holes through the engine crossmember, only through the rear surface. After you remove the TBB, you will use a template to drill the forward side.

With the TBB installed and fully tightened with the bolts, use a punch (a sharpie can work in a pinch) to mark the center of the vertical bolt holes to be drilled at the bottom of the driver side frame rail. This will let you locate the drilling template.

Remove the TBB, use the crossmember drilling template and the frame rail template as shown to drill the rest of these holes.

Reinstall and tighten down. The steering box can be fully installed now as well.

The hardware baggie labeled "F11" will have all of the hardware for the track bar bracket, except the hardware that is shared with the buckets and steering

No.7

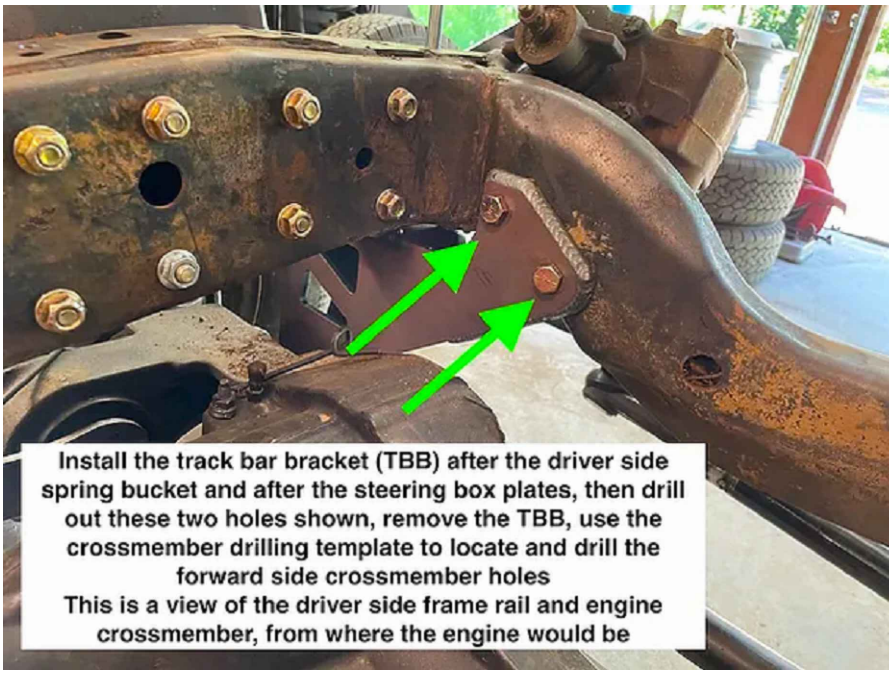

NOTE: I have modified the drilling template on the right side of the below picture so that it does not locate based off of any oem holes. I found this to be an unreliable way of locating the template. The template should be located off of a center punch mark that was made with TBB installed and tightened down.

No.8

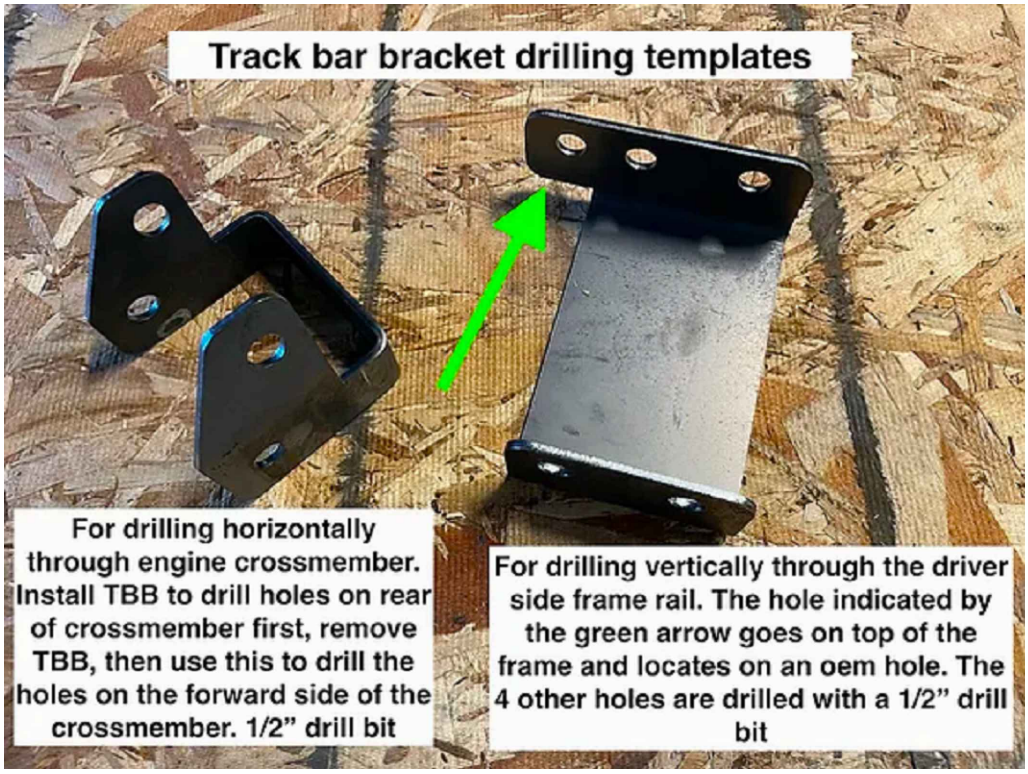
Track bar bracket drilling templates
For drilling horizontally through engine crossmember. Install TBB to drill holes on rear of crossmember first, remove TBB, then use this to drill the holes on the forward side of the crossmember. 1/2" drill bit
For drilling vertically through the driver side frame rail. The hole indicated by the green arrow goes on top of the frame and locates on an oem hole. The 4 other holes are drilled with a 1/2" drill bit

No.9

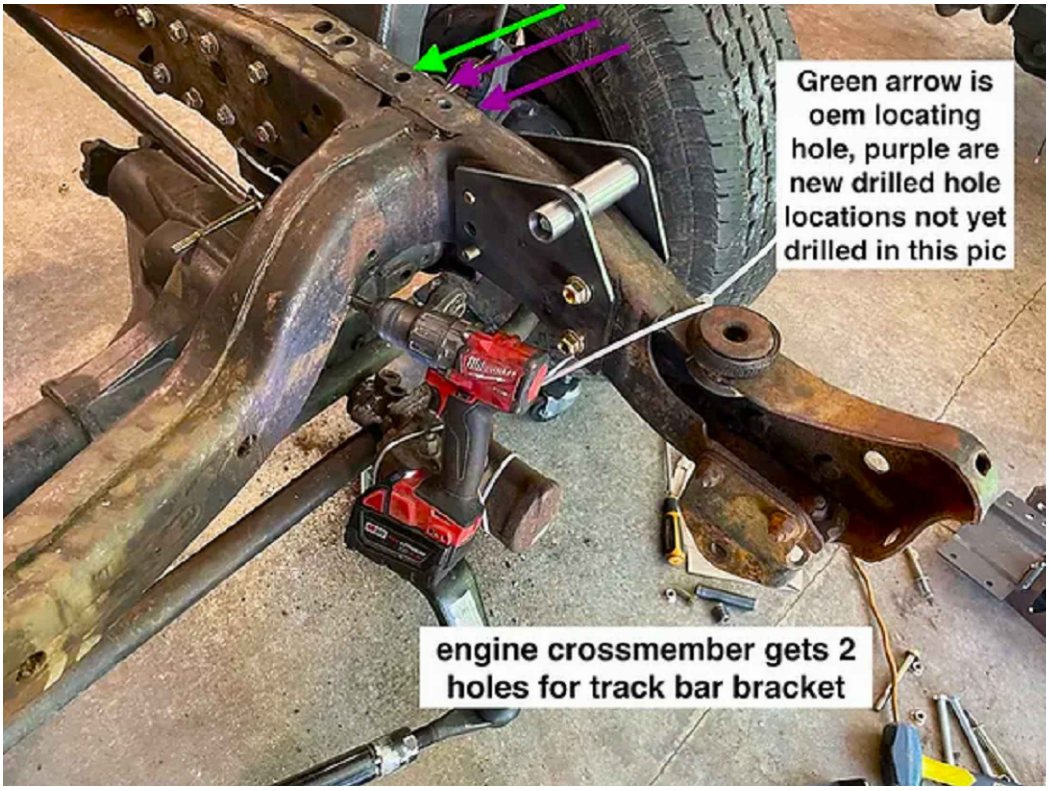
Green arrow is oem locating hole, purple are new drilled hole locations not yet drilled in this pic
engine crossmember gets 2 holes for track bar bracket

No.10

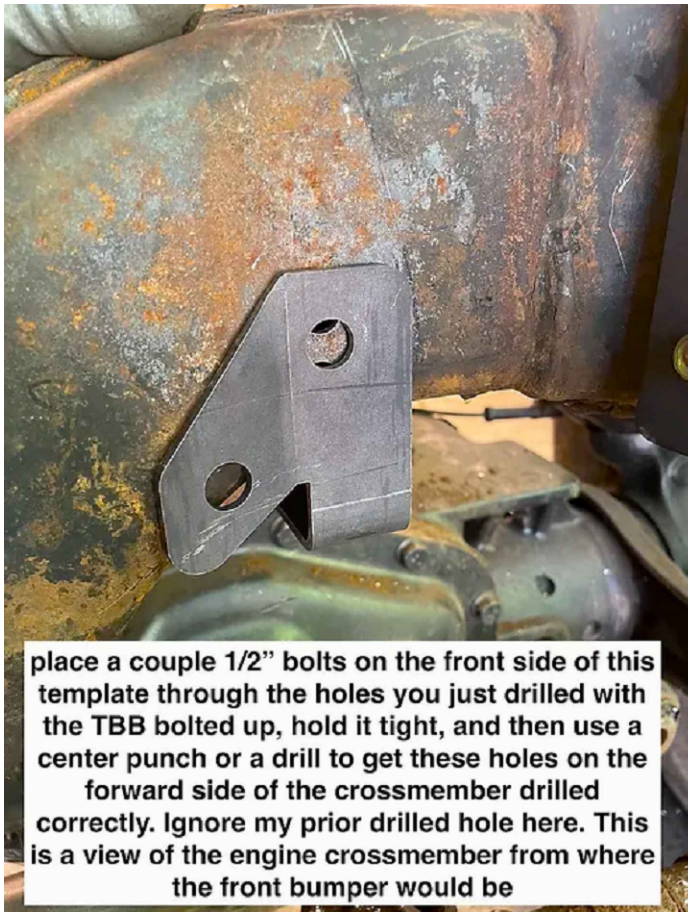
place a couple 1/2" bolts on the front side of this template through the holes you just drilled with the TBB bolted up, hold it tight, and then use a center punch or a drill to get these holes on the forward side of the crossmember drilled correctly. Ignore my prior drilled hole here. This is a view of the engine crossmember from where the front bumper would be

No.11

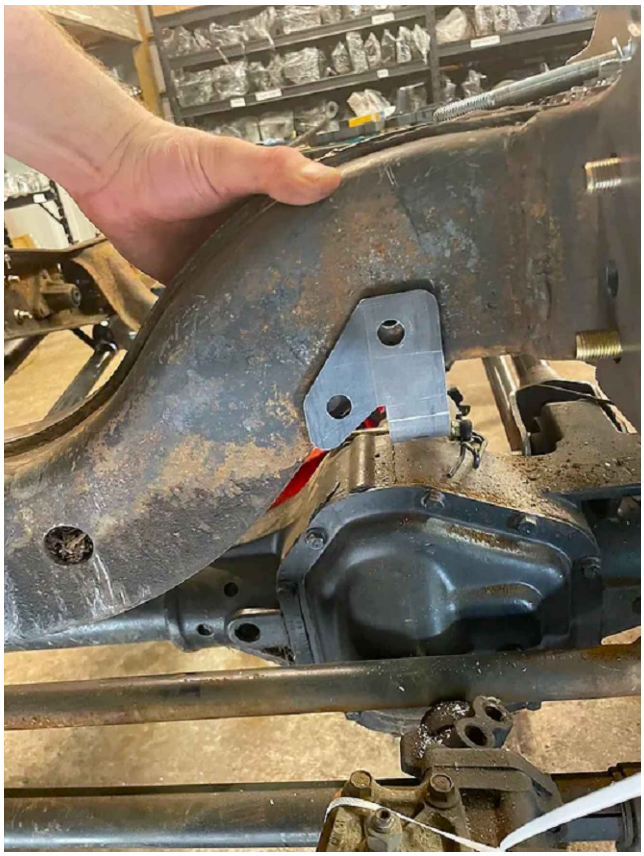

No.12

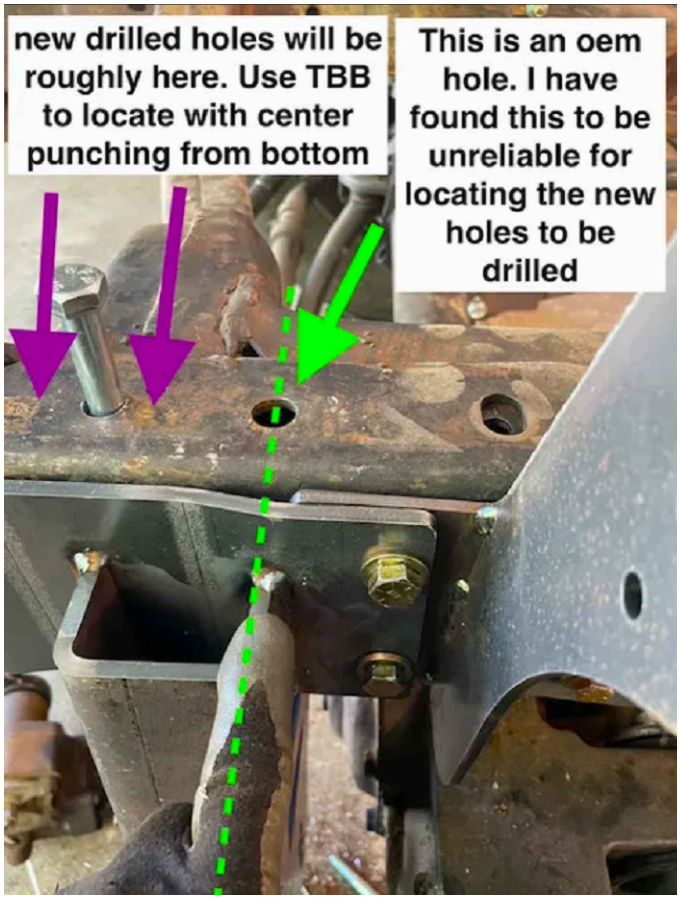
new drilled holes will be roughly here. Use TBB to locate with center punching from bottom
This is an oem hole. I have found this to be unreliable for locating the new holes to be drilled

No.13


After new holes drilled- two 1/2" bolts can go all of the way through the driver side frame rail

Step Five: Radius Arm Brackets

The radius arm brackets are meant to locate on one oem hole up above AND on two oem holes below on the bottom flange originally for the crossmember supports. A drilling template also locates off of these same holes and helps with drilling 1/2" holes up above and a 7/16 hole below. 4 Link gets its own template that helps with the 9/16" hole

The original trans / transfer case crossmember support brackets need to be removed and replaced with the support tabs that are included with this kit.

The hardware baggie labeled "F13" will have all of the hardware for the radius arm brackets and support tabs

No.14

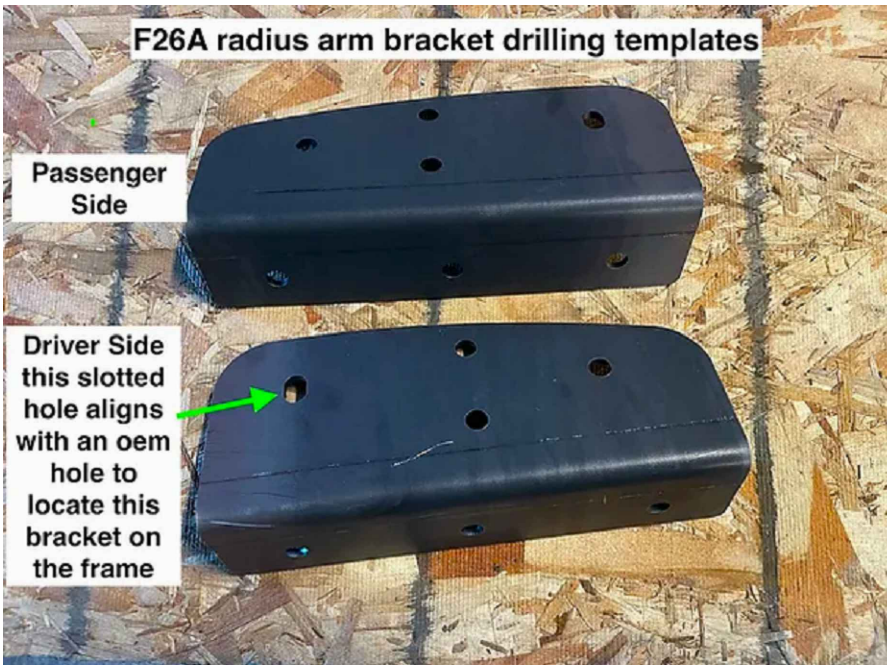

No.15

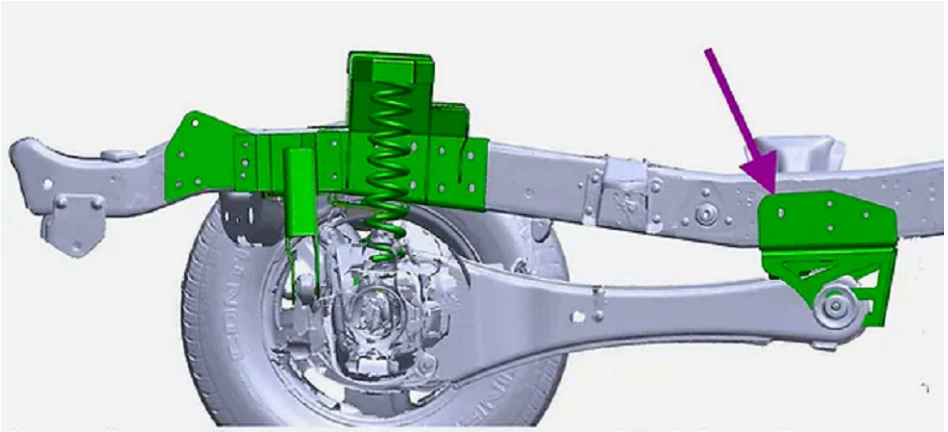

Use the drilling template, not the actual radius arm brackets, to drill the RAB holes. This shows how the RAB template will mount on the frame and the slotted hole shown by the arrow locates to an oem hole, the rest of the holes need drilled. The horizontal holes up need drilled with a 1/2" bit, the veritcal holes below need drilled with a 7/16" bit

No.16

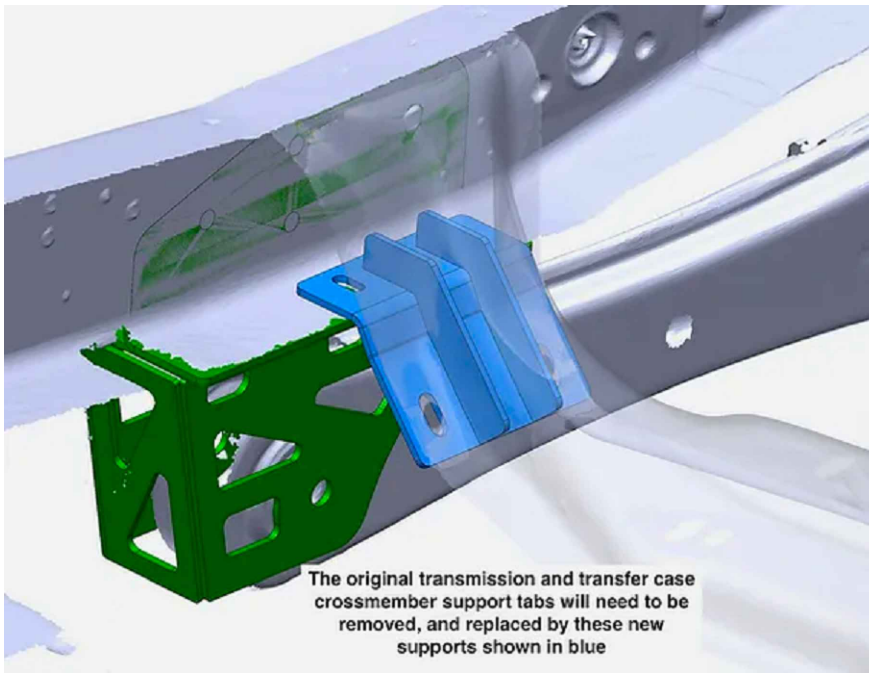
The original transmission and transfer case crossmember support tabs will need to be removed, and replaced by these new supports shown in blue